Specifications

P-00498 24 VDC 200 Watt Motor

The Glide-Line™ motor has just one moving part, operates almost silently and gives you unprecedented flexibility in manufacturing lead time.

The Glide-Line™ motor is a solution offering greater reliability and design freedom. The system is remarkably simple and cost effective. It consists of an externally-mounted direct drive brushless DC motor and an electronic speed control.

Extreme Reliability: 150,000 Hour Bearing Life

The new system uses an extremely reliable 4⅝-inch diameter brushless DC servo-motor with an electronically-controlled operating speed of just 560 rpm. It produces high torque at low speed without using failure-prone gear reducers, linkages or drive chains. The net result of the low speed combined with the robust bearings is a 155,000 hour calculated bearing life (L_{10} ANSI/AFBMA Std 9-1978.)

Almost Silent Operation

The Glide-Line™ motor is almost silent in operation at full power. There are no gears, drive chains or other moving parts to generate noise.

Plug and Play Simplicity

The Glide-Line™ motor controller is a rugged, reliable device that gives you a simple plug and play connection. You control your manufacturing lead-time.

Simple to Service

If a motor ever fails, it is easy to replace because it's mounted externally. Only one part number needs to be stocked for spares and repairs.

Features

- 24V brushless DC motor
- 4.63" Ø x 1.5"L
- Shaft 0.4724"Ø x 2.0"L with flat
- 20" leads with connector
- 8-200W input
- 112-560 RPM
- 15 in-lbf continuous torque

GLIDE-LINE™

Specifications

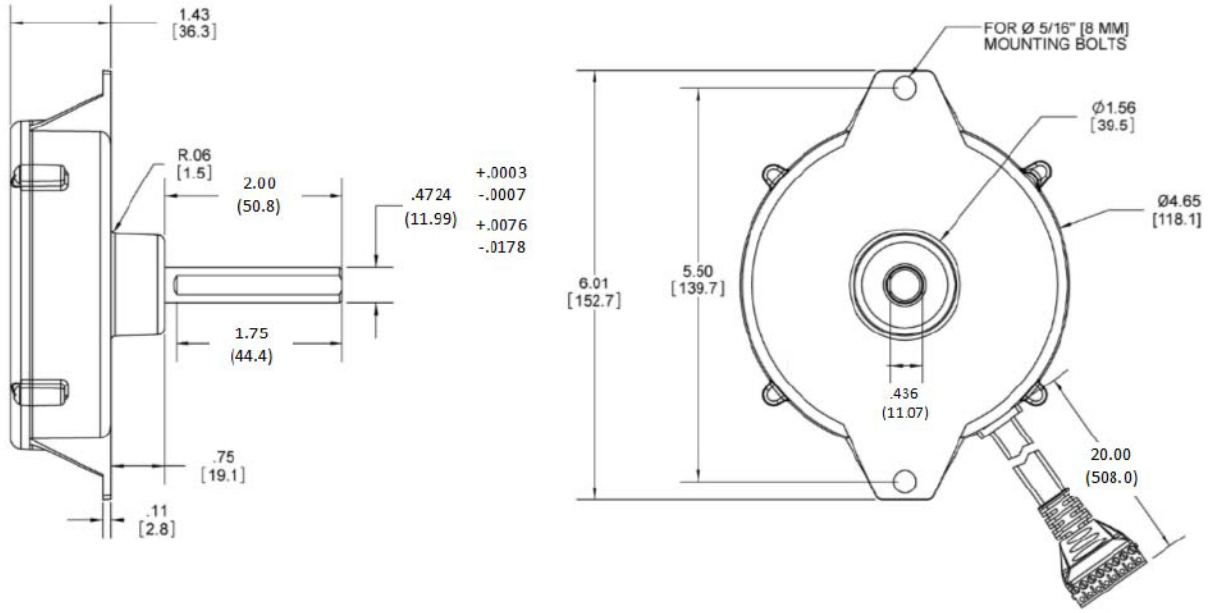

US Patent 7,537,107

Motor Series	**200W24**				
Description	**US Units**			**Metric Units**	
Input Power					
Voltage (rated)	24	VDC		24	VDC
Amperage (rated)	8.0	Amps		8.0	Amps
Amperage (no-load)	0.32	Amps		0.32	Amps
Watts (rated)	192	Watts		192	Watts
Output					
Speed (rated)	560	RPM		58.6	r/s
Speed (minimum)	112	RPM		11.7	r/s
Torque (continuous)	15	In·lbf		1.69	N·m
Torque (starting)	42	In·lbf		4.75	N·m
Motor Constants					
K_E (Back EMF)	33.5	V/kRPM		0.32	V/r/s
K_T (Torque/Amp)	45.3	In·oz/A		0.32	N·m/A
R_T (Terminal Resistance)	0.43	Ohms		0.43	Ohms

UniDrive®

Run Longer™

One Motor – Any Conveyor Width

One UniDrive® motor offers a virtually endless number of conveyor width configurations. Conveyors from 5”-50” inches wide can use the same UniDrive® motor design. You can’t do that with an MDR. You can manage less and save more. Now that’s Simplicity in Motion™.

Safe Operation & 24 Volt DC powered

Safety is key. We designed UniDrive® to operate on low-voltage 24VDC, to protect your hard-working employees. This helps reduce the risks associated with electrical shock and mechanical injury. Let’s work safer, together.

Quiet Operation

UniDrive® features a gearless, brushless DC motor that has only one moving part. New UniDrive® users are often quite surprised how much quieter UniDrive® is compared to traditional motor driven rollers (MDRs). Our key initiative for positive environment.

Energy Efficient

UniDrive® helps pay for itself by offering better energy savings compared to most AC motors or traditional MDRs. UniDrive® features settable low amperage operation and configurable zone stop when empty or accumulated, reducing energy waste and providing superior efficiency. Now, that’s a good investment!

Most Affordable TCO
Low Total Cost of Ownership

UniDrive® owners understand the real value of buying the hyper-long life motors. Why would anyone buy an MDR that needs replacement every few years when you can select one with a useful life measured in decades? Don’t you have better things to do with your time than replacing MDRs?

Maintenance Free
Motor means..

Zero maintenance. None. Ever. No gears to wear out. No oil to change. With a design life of over ten times that of a typical MDR, your UniDrive® motor is literally the last thing you need to worry about. Your UniDrive® can provide peace of mind through its superior design-life of over 250,000 hours*. Less downtime means more profits.

*(*Based on accepted L10 bearing life calculations.)*

One Motor.
Any Conveyor System.

UNIDRIVE MOTOR

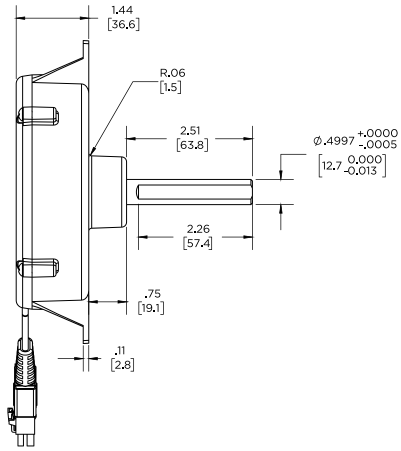

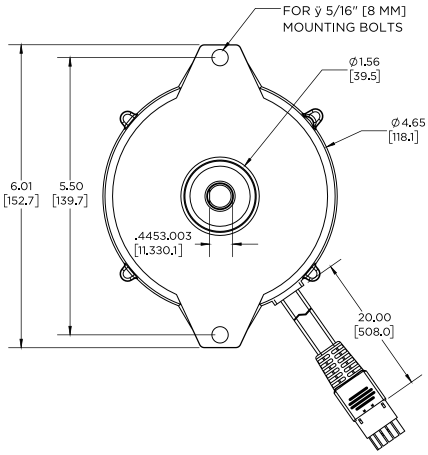

MOTOR SIZING CHART			
Rated Output Wattage	Rated Torque in-lb	Rated Torque N-m	Speed Range (RPM)
25 Watt	8	0.9	70-280
48 Watt	15	1.7	55-280
60 Watt	15	1.7	70-350
80 Watt	15	1.7	90-450
100 Watt	15	1.7	110-560
120 Watt	15	1.7	140-700

UNIDRIVE POWERCUBE™

P3 - POWERCUBE™ DRIVES				
Watts	Ratio	Torque in-lb	Torque N-m	Speed Range (RPM)
60 Watt	5:1	40-80	4.5-9.0	70-14
	7.5:1	60-120	6.8-13.6	46-9
	10:1	80-160	9.0-18.1	35-7
	15:1	120-240	13.6-27.1	23-4
	20:1	160-300	18.1-33.9	17-3
	30:1	200-400	22.6-45.2	11-2
80 Watt	5:1	30-80	3.4-9.0	90-18
	7.5:1	40-150	4.5-16.9	60-12
	10:1	60-180	6.8-20.3	45-9
100 Watt	5:1	40-110	4.5-12.4	112-22
	7.5:1	60-160	6.8-18.1	74-14
	10:1	80-200	9.0-22.6	56-11
	15:1	110-260	13.6-29.4	37-7
	20:1	160-320	18.1-36.1	28-5

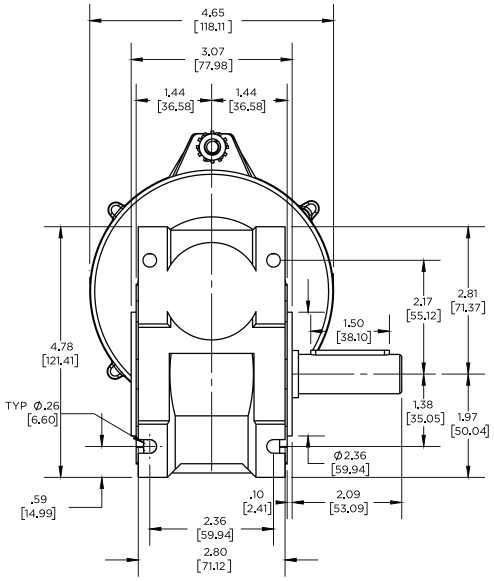

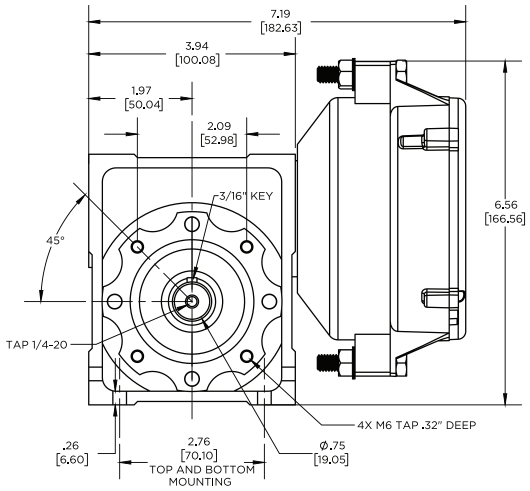

Automation Controls Group
Simplicity in Motion

5855 N. Glen Park Road, Milwaukee, WI 53209, USA
Tel: (414) 228-5522 | www.unidrive.solutions